AVP LED

LED globe & guard lighting
for harsh environments

RIG-A-LITE™
An Avail Infrastructure Solutions Company

Classifications

- UL 1598A Marine Outside Type
- UL 1598 Wet Locations
- UL 8750 LED Safety
- CSA C22.2 #250.0-08
- NEMA 3, 4 & 4X
- Tested to LM79 and LM80
- Buy American Act (BAA) Compliant

availinfra.com/rig-a-lite

8500 Hansen Road,
Houston, TX 77075
(713) 943-0340

AVP LED
LED globe & guard lighting for harsh environments

Key Features

1 High lumen output in a compact luminaire

2 Rugged 5/32" thick housing

3 Glare-reducing frosted globe

4 Field replaceable LED circuit boards and drivers

5 Protective guard

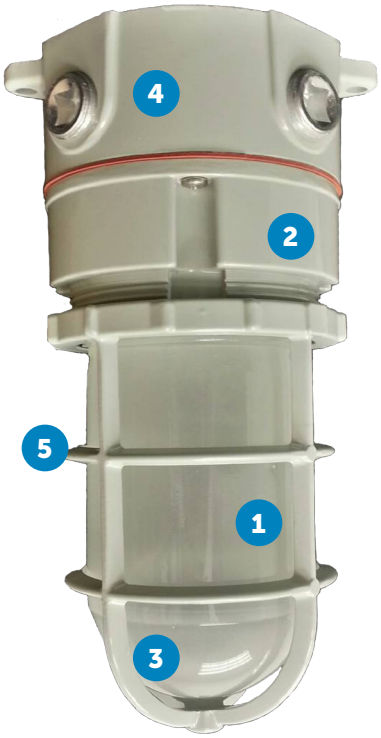

Additional Features

- Ceiling, pendant and wall-mounting options
- No external fins
- Optional dimming driver
- Standard 2kV surge protection
- 5-year warranty

Standard Materials

Body:
A360 Aluminum (less than .4% copper content) with baked-on gray epoxy finish

Guard:
A360 Aluminum (less than .4% copper content) with baked-on gray epoxy finish

Gaskets:
One-Piece Silicone

Lens:
Borosilicate Glass

Hardware:
Stainless Steel

RIG-A-LITE™
An Avail Infrastructure Solutions Company

availinfra.com/rig-a-lite

8500 Hansen Road,
Houston, TX 77075
(713) 943-0340

AVP LED
LED globe & guard lighting for harsh environments

Catalog Number Logic

AVP 20L2 - U - HF - G - C - XX

1 2 3 4 5 6 7

1
BASIC SERIES
(i) AVP = Marine
(ii) AVPD = Wet and Damp Locations

2
LAMP WATTAGE & TYPE
20L2 = 20 Watt LED (4000 CCT)

3
BALLAST VOLTAGE
U = 120-277V 50/60 HZ

4
GLOBE
HF = Heat Resistant Frosted Glass Globe
HRG = Heat Resistant Green Glass Globe
HRA = Heat Resistant Amber Glass Globe
HRB = Heat Resistant Blue Glass Globe
HRR = Heat Resistant Red Glass Globe

5
GUARD
G = Guard

6
MOUNTING STYLE
P = Pendant
W = Wall Mount with Box
C = Ceiling

7
OPTIONS
30 = 3000K (CCT)
35 = 3500K (CCT)
50 = 5000K (CCT)

Catalog logic is for explaining catalog number structure only. Not all combinations are possible; consult factory for catalog numbers not listed in charts.

Certification Guide

Model	Mount	Wattage	Operating Voltage	Total Lumens	Lumens per Watt	CRI	CCT	Ambient Temperature	Supply Wire Suitable Temperature °C
AVP20L2UHFG	P, C, W	20W	120V - 277V 50/60 Hz	1769	87	83	4017	-20°C < Tamb < 50°C	90°C

RIG-A-LITE™
An Avail Infrastructure Solutions Company

availinfra.com/rig-a-lite

8500 Hansen Road,
Houston, TX 77075
(713) 943-0340

AVP LED
LED globe & guard lighting for harsh environments

Mounting

Mounting Style	Catalog Number		Shipping Weight (lbs.)
	Marine UL 1598A, UL 1598	Wet Locations UL 1598	
Pendant Mount	AVP20-L2-U-HF-G-P	AVPD20-L2-U-HF-G-P	4.1
Ceiling Mount	AVP20-L2-U-HF-G-C	AVPD20-L2-U-HF-G-C	4.7
Wall Mount	AVP20-L2-U-HF-G-W	AVPD20-L2-U-HF-G-W	5.4

Accessories

Globe	Type	Color	Thread Diameter	Catalog Number
	Heat Resistant Tempered Glass	Frosted	3-5/16 in.	VGL100HRFRSTD

Guard	Description	Catalog Number
	Cast Aluminum Guard	59030AMPG

RIG-A-LITE™
An Avail Infrastructure Solutions Company

availinfra.com/rig-a-lite

8500 Hansen Road,
Houston, TX 77075
(713) 943-0340

AVP LED
LED globe & guard lighting for harsh environments

Fixture Dimensions (inches)

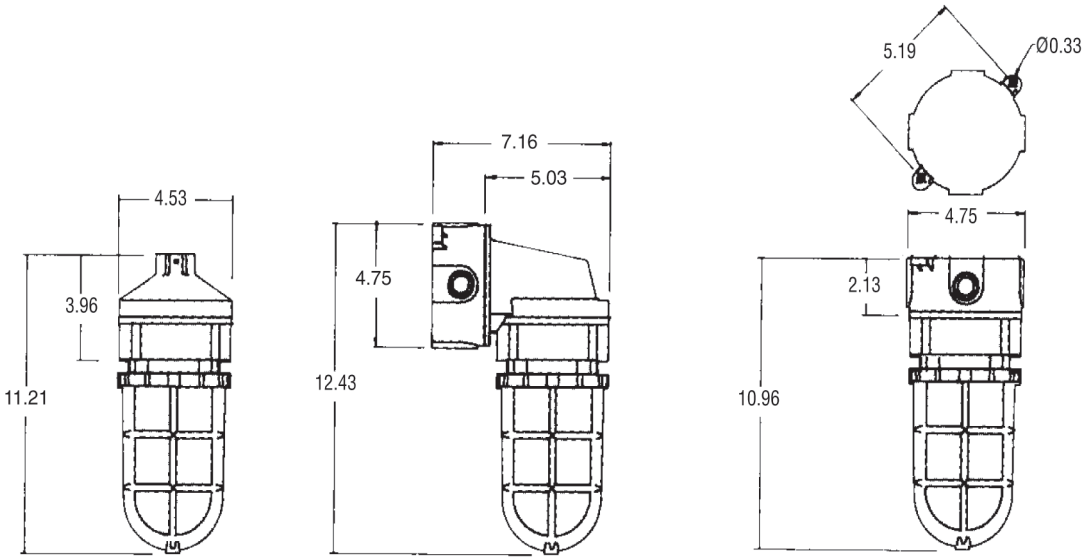

Photometric Data

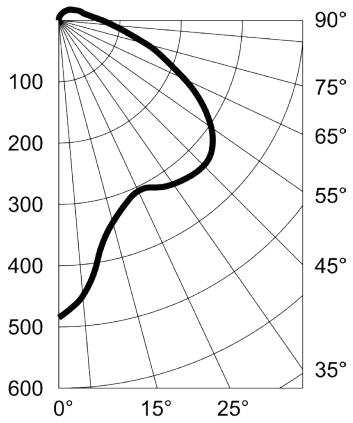

RIG-A-LITE™
An Avail Infrastructure Solutions Company

availinfra.com/rig-a-lite

8500 Hansen Road,
Houston, TX 77075
(713) 943-0340

© 2025 Avail Infrastructure Solutions 03/2026 JS