SAFJ Hi-Lumen LED

LED area lighting for hazardous locations

RIG-A-LITE™
An Avail Infrastructure Solutions Company

Classifications

- Class I, Division 2, Groups A, B, C, & D
- Class II, Divisions 1 & 2, Groups E, F & G
- Class III
- UL 1598A Marine Outside Type
- UL 1598 Wet Locations
- UL 844 Hazardous Locations
- UL 8750 LED Safety
- Tested to LM 79 & LM 80
- 65° C Ambient Temperature
- NEMA 4X
- IP66
- CUL

IECEx

- Ex nA IIC T* Gc
- Ex tb IIIC T*°C Db
- -40°C ≤ Ta ≤ 55°C
- -40°C ≤ Ta ≤ 65°C
- Certificate: IECEx UL 18.0035X

ATEX

- Ex II 3 G
- Ex nA IIC T* Gc
- -40°C ≤ Ta ≤ 55°C
- -40°C ≤ Ta ≤ 65°C
- Certificate: DEMKO 18 ATEX 1797X
- Ex II 2 D
- Ex tb IIIC T*°C Db IP66
- -40°C ≤ Ta ≤ 55°C
- -40°C ≤ Ta ≤ 65°C
- Certificate: DEMKO 18 ATEX 2047X

availinfra.com/rig-a-lite

8500 Hansen Road,
Houston, TX 77075
(713) 943-0340

SAFJ Hi-Lumen LED
LED area lighting for hazardous locations

Key Features

1. Wide distribution pattern
2. Field replaceable LEDs and drivers
3. Hinged mount for easy access to internal components
4. Isolated LED compartment reduces temperature within driver housing
5. Unique design enhances airflow for greater heat dissipation
6. Heavy-duty tempered glass lens
7. Type I, III and V light distribution options

Additional Features

- Standard 10kV surge protection
- Pendant, ceiling, wall and stanchion mounting options
- Terminal block
- Mates directly to SAFJ HID and select competitor mounts
- Dimming option
- Optional stainless steel guard
- 5-year warranty

Standard Materials

Body:
A360 aluminum (less than .4% copper content) with baked-on gray epoxy finish

Gaskets:
One-Piece Silicone

Lens:
Borosilicate Glass

Hardware:
Stainless Steel

RIG-A-LITE™
An Avail Infrastructure Solutions Company

availinfra.com/rig-a-lite

8500 Hansen Road,
Houston, TX 77075
(713) 943-0340

SAFJ Hi-Lumen LED
LED area lighting for hazardous locations

Catalog Number Logic

SAFJ - 24 - L3 - U - G - 1 - G - P - XX

(1) (2) (3) (4) (5) (6) (7) (8) (9)

1
BASIC LUMINAIRE
SAFJ LED = N. American Standards[1]
EXSAFJ LED = IEC, ATEX Standards[1]

2
LAMP CURRENT/LAMP WATTAGE
16 = 160 Watts
21 = 210 Watts
24 = 240 Watts

3
LAMP TYPE
L3 = LED

4
DRIVER VOLTAGE
U = 120-277V 50/60 HZ
N = 347/480V 60 HZ

5
GLOBE
G = Clear Glass Globe

6
OPTICS
Blank = Type V Light Distribution
1 = Type I Light Distribution
3 = Type III Light Distribution

7
GUARD
G = Stainless Wire Guard

8
MOUNTING STYLE
P = ¾" Pendant Mount
P1 = 1" Pendant Mount
C = ¾" Ceiling Mount
C1 = 1" Ceiling Mount
W = ¾" Wall Mount
W1 = 1" Wall Mount
S = 1-¼" 25°Stanchion Mount
S1 = 1-½" 25°Stanchion Mount
L = 1-¼" 90°Stanchion Mount
L1 = 1-½" 90°Stanchion Mount

9
OPTIONS[1]
FB1 = Single Fuse Block[2,3]
FB2 = Double Fuse Block[2,3]
30 = 3000K CCT
35 = 3500K CCT
40 = 4000K CCT

[1] Consult factory for pricing.

[2] Not available with universal driver unless incoming voltage is specified. When installed, one fuse block is provided for 120 & 277V and two fuse blocks are provided for 208, 220, 240, 347 and 480V. Fuse not provided.

[3] FB option not available for marine listed fixtures or EXSAFJ models..

Part numbering logic is for explaining catalog part structure only. Not all combinations are possible; consult factory for catalog numbers not listed on chart..

RIG-A-LITE™
An Avail Infrastructure Solutions Company

availinfra.com/rig-a-lite

8500 Hansen Road,
Houston, TX 77075
(713) 943-0340

SAFJ Hi-Lumen LED
LED area lighting for hazardous locations

Certification Guide - SAFJ

Model	Mount	Wattage	Operating Voltage	Total Lumens	Lumens per Watt	CRI	CCT	Ambient Temperature	Class I, Div. 2, Group A, B, C & D	Class II, Div. 2, Group E, F & G Class III	Simultaneous Presence	Supply Wire Suitable Temperature, °C
SAFJ16L3UG	P, C, W, S, L	160W	120V - 277V 50/60 Hz	20,088	125.2	82.6	5035	-40°C < Tamb < 65°C*	T2D	N/A	N/A	90°C
SAFJ16L3*G	P, C, W, S, L	160W	120V - 277V 50/60 Hz, 347V/480V 60Hz	20,088	125.2	82.6	5035	-40°C < Tamb < 55°C*	T3	T4A	T2B	90°C
SAFJ16L3*G1	P, C, W, S, L	160W		14,345	89.1	85.3	5178	-40°C < Tamb < 55°C	T2D	T4	T2A	90°C
SAFJ16L3*G3	P, C, W, S, L	160W		16,708	103.6	84.3	5065	-40°C < Tamb < 55°C	T2D	T4	T2A	90°C
SAFJ21L3UG	P, C, W, S, L	210W	120V - 277V 50/60 Hz	26,001	128.1	82.5	4994	-40°C < Tamb < 65°C*	T2D	N/A	N/A	90°C
SAFJ21L3*G	P, C, W, S, L	210W	120V - 277V 50/60 Hz, 347V/480V 60Hz	26,001	128.1	82.5	4994	-40°C < Tamb < 55°C*	T3	T4A	T2B	90°C
SAFJ21L3*G1	P, C, W, S, L	210W		18,184	89.6	85.3	5171	-40°C < Tamb < 55°C	T2D	T4	T2A	90°C
SAFJ21L3/8G3	P, C, W, S, L	210W		21,023	103.6	84.3	5037	-40°C < Tamb < 55°C	T2D	T4	T2A	90°C
SAFJ24L3UG	P, C, W, S, L	240W	120V - 277V 50/60 Hz	30,815	127.6	83.7	5003	-40°C < Tamb < 65°C*	T2D	N/A	N/A	90°C
SAFJ24L3*G	P, C, W, S, L	240W	120V - 277V 50/60 Hz, 347V/480V 60Hz	30,815	127.6	83.7	5003	-40°C < Tamb < 55°C*	T3	T4A	T2B	90°C
SAFJ24L3*G1	P, C, W, S, L	240W		21,813	90.5	86.7	5199	-40°C < Tamb < 55°C	T2D	T4	T2A	90°C
SAFJ24L3*G3	P, C, W, S, L	240W		25,370	105.1	85.7	5076	-40°C < Tamb < 55°C	T2D	T4	T2A	90°C

**U or N models*

Certification Guide - EXSAFJ

Model	Mount	Wattage	Operating Voltage	Total Lumens	Lumens per Watt	CRI	CCT	Ambient Temperature	Non-Sparking (nA)	Dust (tb)	Simultaneous (nA and tb)
EXSAFJ16L3UG	P, C, W, S, L	160W	120V - 277V 50/60 Hz	20,088	125.2	82.6	5035	-40°C < Tamb < 65°C*	Ex II 3 G Ex nA IIC T251°C Gc	Ex II 2 D Ex tb IIIC T92°C Db IP66	Ex II 3 G Ex nA IIC T251°C Gc Ex II 2 D Ex tb IIIC T92°C Db IP66
EXSAFJ16L3NG	P, C, W, S, L	160W	347V/480V 60Hz	20,088	125.2	82.6	5035	-40°C < Tamb < 55°C*	Ex II 3 G Ex nA IIC T241°C Gc	Ex II 2 D Ex tb IIIC T82°C Db IP66	Ex II 3 G Ex nA IIC T241°C Gc Ex II 2 D Ex tb IIIC T82°C Db IP66
EXSAFJ16L3*G1	P, C, W, S, L	160W	120V - 277V 50/60 Hz, 347V/480V 60Hz	14,345	89.1	85.3	5178	-40°C < Tamb < 55°C	Ex II 3 G Ex nA IIC T280°C Gc	Ex II 2 D Ex tb IIIC T82°C Db IP66	Ex II 3 G Ex nA IIC T280°C Gc Ex II 2 D Ex tb IIIC T82°C Db IP66
EXSAFJ16L3*G3	P, C, W, S, L	160W		16,708	103.6	84.3	5065	-40°C < Tamb < 55°C	Ex II 3 G Ex nA IIC T280°C Gc	Ex II 2 D Ex tb IIIC T82°C Db IP66	Ex II 3 G Ex nA IIC T280°C Gc Ex II 2 D Ex tb IIIC T82°C Db IP66
EXSAFJ21L3UG	P, C, W, S, L	210W	120V - 277V 50/60 Hz	26,001	128.1	82.5	4994	-40°C < Tamb < 65°C*	Ex II 3 G Ex nA IIC T251°C Gc	Ex II 2 D Ex tb IIIC T92°C Db IP66	Ex II 3 G Ex nA IIC T251°C Gc Ex II 2 D Ex tb IIIC T92°C Db IP66
EXSAFJ21L3NG	P, C, W, S, L	210W	347V/480V 60Hz	26,001	128.1	82.5	4994	-40°C < Tamb < 55°C*	Ex II 3 G Ex nA IIC T241°C Gc	Ex II 2 D Ex tb IIIC T82°C Db IP66	Ex II 3 G Ex nA IIC T241°C Gc Ex II 2 D Ex tb IIIC T82°C Db IP66
EXSAFJ21L3*G1	P, C, W, S, L	210W	120V - 277V 50/60 Hz, 347V/480V 60Hz	18,184	89.6	85.3	5171	-40°C < Tamb < 55°C	Ex II 3 G Ex nA IIC T280°C Gc	Ex II 2 D Ex tb IIIC T82°C Db IP66	Ex II 3 G Ex nA IIC T280°C Gc Ex II 2 D Ex tb IIIC T82°C Db IP66
EXSAFJ21L3*G3	P, C, W, S, L	210W		21,023	103.6	84.3	5037	-40°C < Tamb < 55°C	Ex II 3 G Ex nA IIC T280°C Gc	Ex II 2 D Ex tb IIIC T82°C Db IP66	Ex II 3 G Ex nA IIC T280°C Gc Ex II 2 D Ex tb IIIC T82°C Db IP66
EXSAFJ24L3UG	P, C, W, S, L	240W	120V - 277V 50/60 Hz	30,815	127.6	83.7	5003	-40°C < Tamb < 65°C*	Ex II 3 G Ex nA IIC T251°C Gc	Ex II 2 D Ex tb IIIC T92°C Db IP66	Ex II 3 G Ex nA IIC T251°C Gc Ex II 2 D Ex tb IIIC T92°C Db IP66
EXSAFJ24L3NG	P, C, W, S, L	240W	347V/480V 60Hz	30,815	127.6	83.7	5003	-40°C < Tamb < 55°C*	Ex II 3 G Ex nA IIC T241°C Gc	Ex II 2 D Ex tb IIIC T82°C Db IP66	Ex II 3 G Ex nA IIC T241°C Gc Ex II 2 D Ex tb IIIC T82°C Db IP66
EXSAFJ24L3*G1	P, C, W, S, L	240W	120V - 277V 50/60 Hz, 347V/480V 60Hz	21,813	90.5	86.7	5199	-40°C < Tamb < 55°C	Ex II 3 G Ex nA IIC T280°C Gc	Ex II 2 D Ex tb IIIC T82°C Db IP66	Ex II 3 G Ex nA IIC T280°C Gc Ex II 2 D Ex tb IIIC T82°C Db IP66
EXSAFJ24L3*G3	P, C, W, S, L	240W		25,370	105.1	85.7	5076	-40°C < Tamb < 55°C	Ex II 3 G Ex nA IIC T280°C Gc	Ex II 2 D Ex tb IIIC T82°C Db IP66	Ex II 3 G Ex nA IIC T280°C Gc Ex II 2 D Ex tb IIIC T82°C Db IP66

**U or N models*

RIG-A-LITE™
An Avail Infrastructure Solutions Company

availinfra.com/rig-a-lite

8500 Hansen Road,
Houston, TX 77075
(713) 943-0340

SAFJ Hi-Lumen LED
LED area lighting for hazardous locations

Photometric Data

SAFJ16L3UG

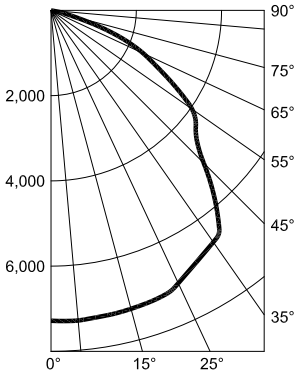

SAFJ21L3UG

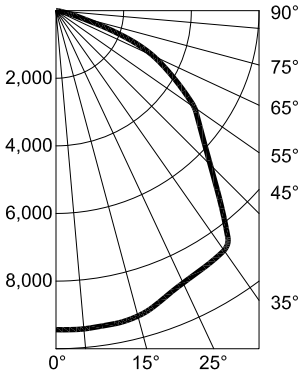

SAFJ24L3UG

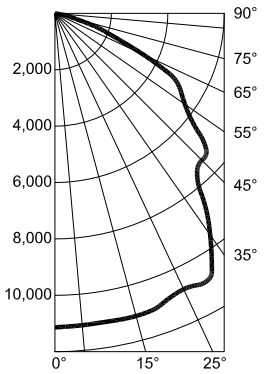

Accessories

Outlet Boxes	Catalog No.	Conduit Hub Size (in.)	Shipping Weight (lbs.)
Rigid Pendant	JMP	3/4	3.0
	JMP1	1	3.0
Ceiling Mount 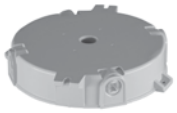	JMC	3/4	3.5
	JMC1	1	3.5
Wall Mount	JMW	3/4	6.0
	JMW1	1	6.0
25° Stanchion Mount	JMS	1-1/4	5.0
	JMS1	1-1/2	5.0
90° Stanchion Mount	JML	1-1/4	6.0
	JML1	1-1/2	6.0

Globes & Guards	Catalog No.	Description	Shipping Weight (lbs.)
Guard	86324	Stainless Steel Wire Guard	1.0
Clear Glass Globe	36242	Clear Glass Globe	9.0

RIG-A-LITE™
An Avail Infrastructure Solutions Company

availinfra.com/rig-a-lite

8500 Hansen Road,
Houston, TX 77075
(713) 943-0340

SAFJ Hi-Lumen LED
LED area lighting for hazardous locations

Fixture Dimensions (inches)

Pendant Mount

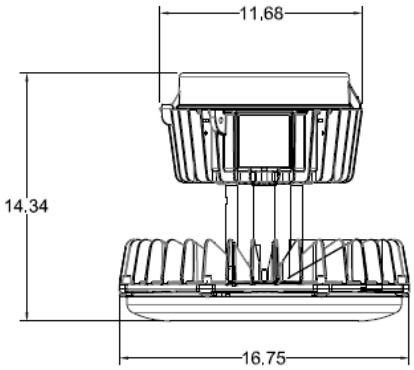

Fixture	Weight
SAFJ24L3UG	42 lbs.
SAFJ21L3UG	40 lbs.
SAFJ16L3UG	38 lbs.

25° Stanchion Mount

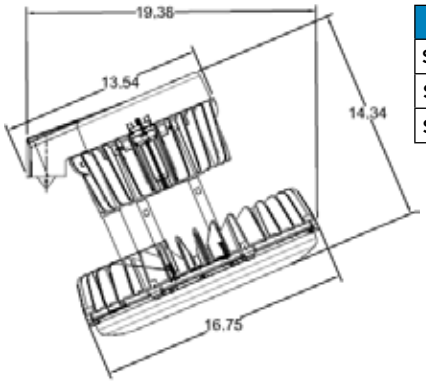

Fixture	Weight
SAFJ24L3UG	44 lbs.
SAFJ21L3UG	42 lbs.
SAFJ16L3UG	40 lbs.

Ceiling Mount

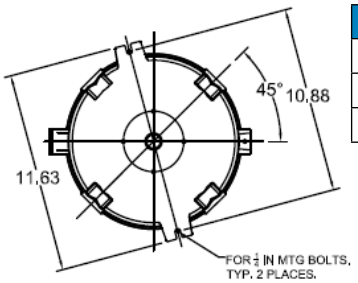

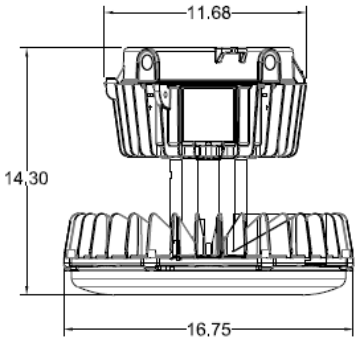

Fixture	Weight
SAFJ24L3UG	42 lbs.
SAFJ21L3UG	40 lbs.
SAFJ16L3UG	38 lbs.

90° Stanchion Mount

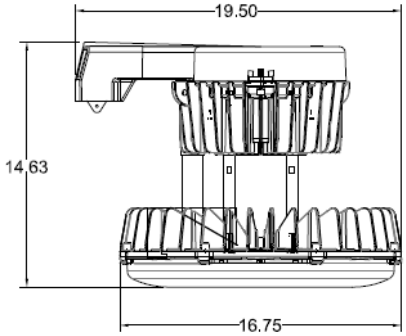

Fixture	Weight
SAFJ24L3UG	45 lbs.
SAFJ21L3UG	43 lbs.
SAFJ16L3UG	41 lbs.

Wall Mount

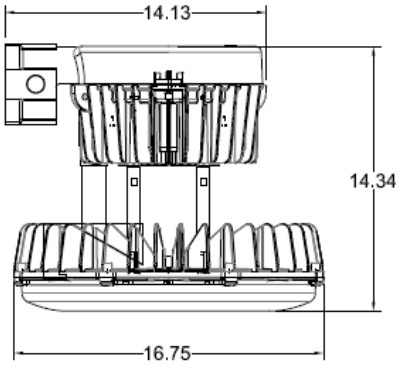

Fixture	Weight
SAFJ24L3UG	45 lbs.
SAFJ21L3UG	43 lbs.
SAFJ16L3UG	41 lbs.

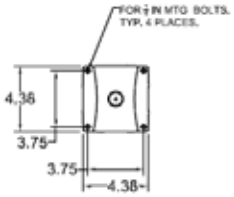

RIG-A-LITE™
An Avail Infrastructure Solutions Company

availinfra.com/rig-a-lite

8500 Hansen Road,
Houston, TX 77075
(713) 943-0340

© 2022 Avail Infrastructure Solutions 12/2022 GDI