BVP Series

Brass lighting for marine
and hazardous environments

RIG-A-LITE™
An Avail Infrastructure Solutions Company

Classifications

- Class I, Division 2, Groups A, B, C & D
- Zone 2, Group IIA, IIB, IIC
- UL 844 Hazardous Locations
- UL 1598A Marine Outside Type
- NEMA 3, 4, 4X

availinfra.com/rig-a-lite

8500 Hansen Road,
Houston, TX 77075
(713) 943-0340

BVP Series
Brass lighting for marine and hazardous environments

Key Features

Designed to meet the rugged demands of marine, petroleum and industrial applications, the BVP Series is suitable for Class I, Division 2 hazardous and marine outdoor salt spray areas. It's rugged construction protects against corrosion and is suitable for indoor and outdoor applications.

1 Choice of incandescent lamps up to 150W (A-21 Max); or compact fluorescent lamps (13W, 18W and 26W)

2 Heat-resistant soda lime glass globes offer additional protection

3 High-temperature silicone gasket

4 Threads are provided for quick and easy, trouble-free maintenance

5 Cast marine brass guard

6 Cast marine brass housing

7 Stainless steel hardware

8 Available in three mounting styles– pendant, ceiling and wall mounts

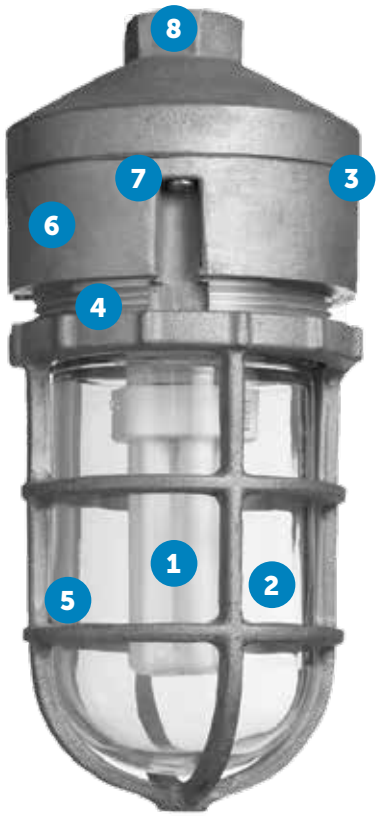

Additional Features

- Class I, Division 2, Groups A, B, C and D
- Zone 2, Groups IIA, IIB and IIC
- NEMA 3, 4 & 4X
- UL 1598A Marine Outside Type
- UL 844 Hazardous Locations
- Enclosed and gasketed
- Glass or polycarbonate globe
- Suitable for indoor or outdoor use
- Suitable for hose-down
- Compact fluorescent or incandescent available
- Twist Lock Lamp Holder (CFL)

RIG-A-LITE™
An Avail Infrastructure Solutions Company

availinfra.com/rig-a-lite

8500 Hansen Road,
Houston, TX 77075
(713) 943-0340

BVP Series
Brass lighting for marine and hazardous environments

Catalog Number Logic

BVP 15I - 24 - HR - G - C - XX

1 2 3 4 5 6 7

1
BASIC SERIES
BVP Brass Series
(i) BVPH = Class I, Division 2, Groups A, B, C & D; UL 844 Hazardous Locations; UL 1598A Marine Outside Type; NEMA 3, 4, 4X
(ii) BVP = Marine; UL 1598A Marine Outside Type; NEMA 3, 4, 4X

2
LAMP WATTAGE & TYPE
13F = 13 Watt Comp. Fluorescent (GX23-2 Base/120V)[1]
13F = 13 Watt Comp. Fluorescent (GX24q-1 Base/277V)[1]
18F = 18 Watt Comp. Fluorescent (G24q-2 Base)[2]
26F = 26 Watt Comp. Fluorescent (GX24q-3 Base)[3]
32F = 32 Watt Comp. Fluorescent (GX24q-3 Base)[6]
15I = Up to 150 Watt (A-21 Max.) Incandescent (Medium Base)[4]

3
BALLAST VOLTAGE
12 = 120V 60 HZ
24 = 240V 50-60 HZ (Incandescent)[4]
27 = 277V 60 HZ
Starting Temperature with Electronic Ballast is 0°C (32°F)

4
GLOBE
HR = Heat Resistant Soda Lime Glass
P = Polycarbonate Prismatic Globe (75 Watt Max.)[5]
CP = Clear Polycarbonate (75 watt max.)[5]; Colored Globes Available with BVP Only; Other Globes Available - Consult Factory

5
GUARD
G = Guard[5]

6
MOUNTING STYLE
P = Pendant
W = Wall Mount with Box
C = Ceiling

7
OPTIONS
E1 = 1/2" NPT Dead End (single hole in any location)
E2 = 3/4" NPT Dead End (single hole in any location)
C1 = 1/2" NPT Thru Feed (two holes onopposite sides)
C2 = 3/4" NPT Thru Feed (two holes on opposite sides)
L1 = 1/2" NPT 90°(two holes at 90° angle)
L2 = 3/4" NPT 90°(two holes at 90° angle)
X1 = 1/2" NPT X (all four hubs drilled)
X2 = 3/4" NPT X (all four hubs drilled)

[1] Philips PLC 10mm/13/USA, OSRAM/Sylvania Dulux D(CF-13CC) or equal lamps for 120V. Philips PLC 13W/4P, OSRAM CF13DD/E or equal for 277V.
[2] Philips PLC 18, OSRAM/Sylvania Dulux (CF-18DD) or equal lamps.
[3] PLT-26. Dulux T-26 or equal lamps.
[4] Can only be ordered as 240V but can be wired from 110-240V
[5] Guard not available with polycarbonate globe.
[6] Phillips PLT-32 lamp.

Catalog logic is for explaining catalog number structure only. Not all combinations are possible; consult factory for catalog numbers not listed in charts.

Certification Guide

Model	Ambient Temperature °C	Class I, Division 2 (When used with)		Supply Wire Suitable Temperature °C
		Globe	Refractor	
BVPH15I	40	T2C	T2B	90
BVPH26F	40	T3C	T3C	90
AVPH32F	40	T3	T3A	90

RIG-A-LITE™
An Avail Infrastructure Solutions Company

availinfra.com/rig-a-lite

8500 Hansen Road,
Houston, TX 77075
(713) 943-0340

BVP Series
Brass lighting for marine and hazardous environments

Mounting

Mounting Style	Lamp Type ①②	Lamp Watt	Catalog Number ③④		Shipping Weight (lbs.)
			Marine UL 1598A	Hazardous & Marine Locations UL 844 & UL1598	
Pendant Mount	Incandescent	150	**BVP15-I-24-HR-G-P**	**BVPH15-I-24-HR-G-P**	8.3
	Compact Flour.	13	**BVP13-F-12-HR-G-P**	**BVPH13-F-12-HR-G-P**	8.3
	Compact Flour.	18	**BVP18-F-12-HR-G-P**	**BVPH18-F-12-HR-G-P**	8.3
	Compact Flour.	26	**BVP26-F-12-HR-G-P**	**BVPH26-F-12-HR-G-P**	8.3
	Compact Flour.	32	**BVP32-F-12-HR-G-P**	**BVPH32-F-12-HR-G-P**	8.3
Ceiling Mount	Incandescent	150	**BVP15-I-24-HR-G-C**	**BVPH15-I-24-HR-G-C**	7.5
	Compact Flour.	13	**BVP13-F-12-HR-G-C**	**BVPH13-F-12-HR-G-C**	7.5
	Compact Flour.	18	**BVP18-F-12-HR-G-C**	**BVPH18-F-12-HR-G-C**	7.5
	Compact Flour.	26	**BVP26-F-12-HR-G-C**	**BVPH26-F-12-HR-G-C**	7.5
	Compact Flour.	32	**BVP32-F-12-HR-G-C**	**BVPH26-F-12-HR-G-C**	7.5
Wall Mount	Incandescent	150	**BVP15-I-24-HR-G-W**	**BVPH15-I-24-HR-G-W**	14.5
	Compact Flour.	13	**BVP13-F-12-HR-G-W**	**BVPH13-F-12-HR-G-W**	14.5
	Compact Flour.	18	**BVP18-F-12-HR-G-W**	**BVPH18-F-12-HR-G-W**	14.5
	Compact Flour.	26	**BVP26-F-12-HR-G-W**	**BVPH26-F-12-HR-G-W**	14.5
	Compact Flour.	32	**BVP32-F-12-HR-G-W**	**BVPH32-F-12-HR-G-W**	14.5

① Incandescent lamps not furnished with the fixture.
② Compact fluorescent lamps furnished with the fixture.
③ 120V 13 Watt compact fluorescent fixture furnished with magnetic ballast.
④ 13 Watt/277V 18 & 26 Watt compact fluorescent fixture furnished with high power factor electronic ballast.

Accessories

Globes	Type	Lamp Size	Color	Thread Diameter	Catalog Number
	Heat Treated Soda Lime Glass	150W	Clear	3-5/16 in.	VGL100HR
	Polycarbonate Prismatic	150W	Clear	3-5/16 in.	VGL100PPG[1]
	Glass Prismatic	150W	Clear	3-5/16 in.	VGL100PRISM

Guard	Description	Catalog Number
	Cast Brass Guard	59030BR

[1] To order colored globes, add suffix A (Amber), B (Blue), R (Red) or G (Green) to catalog number.
[2] Requires guard catalog number: 59030 (Not available with wall mount fixtures).
Colored globes available with BVP only.

RIG-A-LITE™
An Avail Infrastructure Solutions Company

availinfra.com/rig-a-lite

8500 Hansen Road,
Houston, TX 77075
(713) 943-0340

BVP Series
Brass lighting for marine and hazardous environments

Fixture Dimensions (inches)

150 Watt (A-21 Max.) Incandescent Lamp

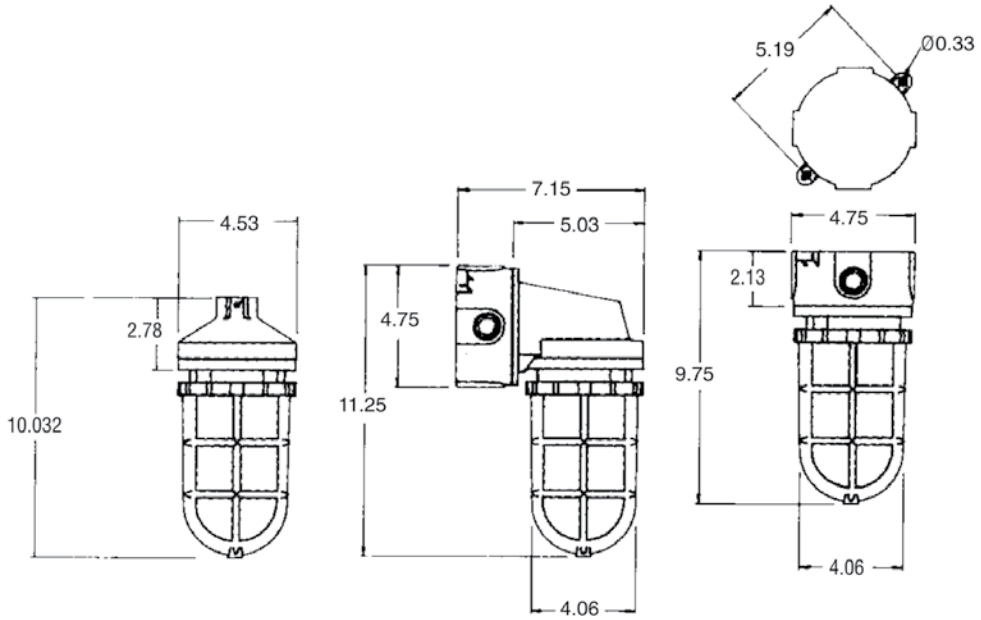

13, 18, 26 & 32 Watt Compact Fluorescent Lamp Glass Globe

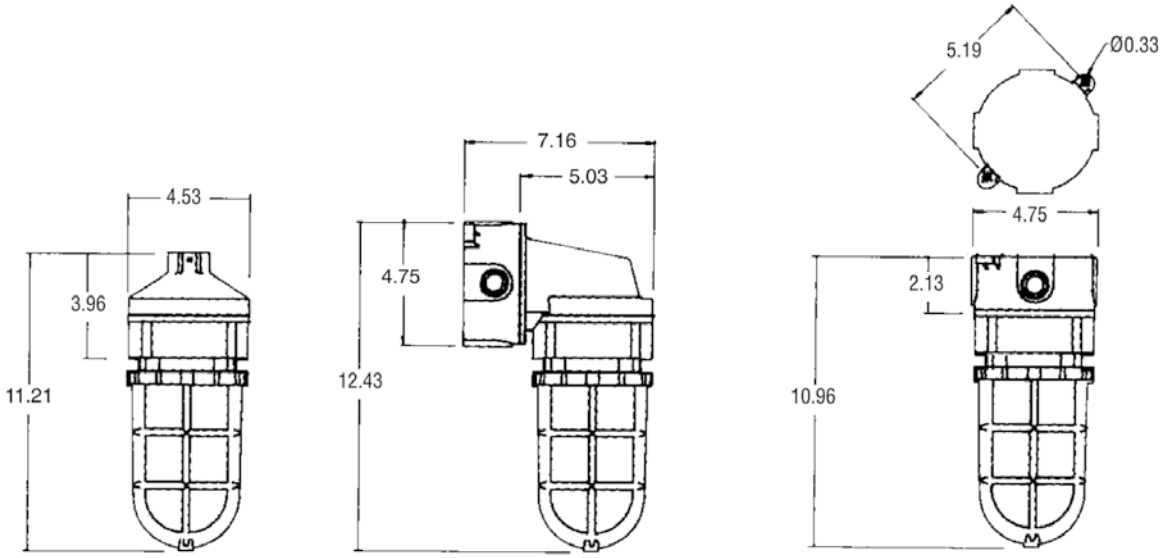

RIG-A-LITE™
An Avail Infrastructure Solutions Company

availinfra.com/rig-a-lite

8500 Hansen Road,
Houston, TX 77075
(713) 943-0340

BVP Series
Brass lighting for marine and hazardous environments

Fixture Dimensions (inches)

26 Watt Compact Fluorescent Lamp with Polycarbonate Globe

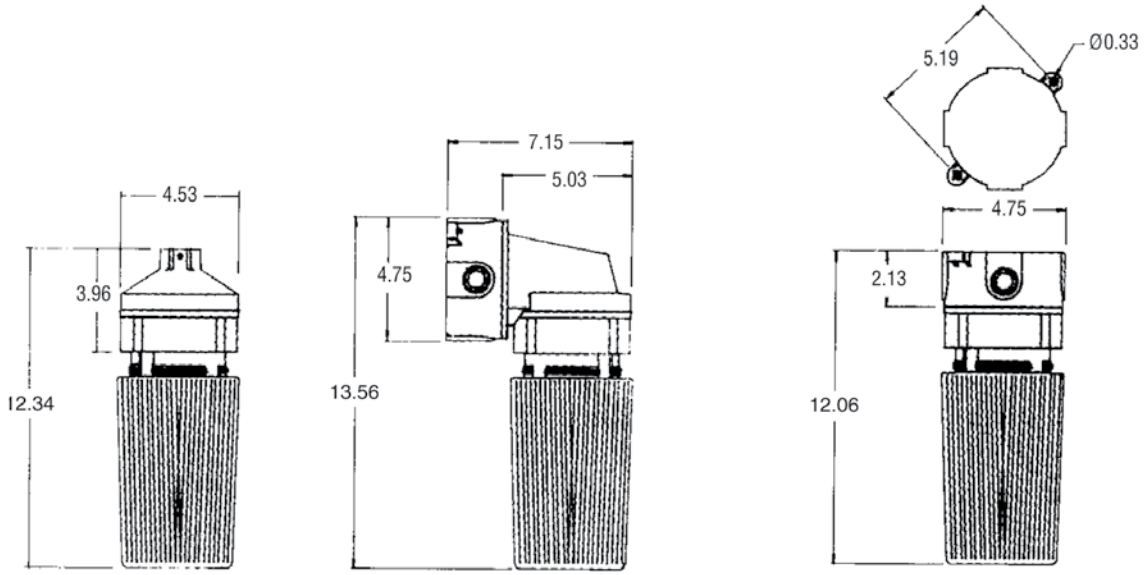

Coefficients of Utilization

BVP26FP

% Effective Ceiling Cavity Reflectance rcc	80			50			10		
% Wall Reflectance rw	50	30	10	50	30	10	50	30	10
Room Cavity Ratio RCR	Effective Floor Cavity Reflectance 20%								
0	.87	.87	.87	.69	.69	.69	.49	.49	.49
1	.69	.63	.59	.53	.49	.46	.35	.33	.31
2	.57	.50	.44	.43	.38	.34	.27	.24	.22
3	.48	.40	.34	.36	.31	.26	.22	.19	.16
4	.42	.33	.27	.31	.25	.21	.19	.15	.12
5	.36	.28	.22	.27	.21	.17	.17	.13	.10
6	.32	.24	.18	.24	.18	.14	.15	.11	.8
7	.28	.21	.16	.21	.16	.12	.13	.9	.7
8	.26	.18	.13	.19	.14	.10	.12	.8	.6
9	.23	.16	.12	.18	.12	.9	.11	.7	.5
10	.21	.14	.10	.16	.11	.8	.10	.7	.4

Candlepower Distribution

Deg.	Norm.
5	17
15	24
25	39
35	67
45	107
55	144
65	159
75	164
85	165
90	161
95	162
105	152
115	135
125	110
135	75
145	41
155	18
165	1

Photometric Data

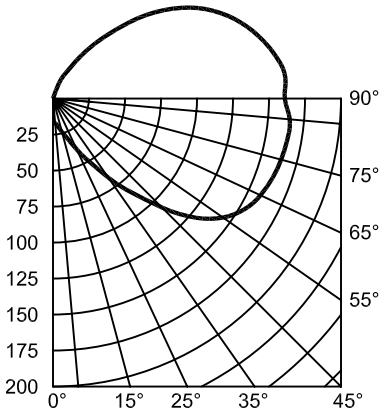

RIG-A-LITE™
An Avail Infrastructure Solutions Company

availinfra.com/rig-a-lite

8500 Hansen Road,
Houston, TX 77075
(713) 943-0340

© 2022 Avail Infrastructure Solutions 11/2022 GDI